FINDING OUR WAY IN DRIGGS:

Design Options and Details for the Driggs/Teton County Wayfinding System

DRIGGS, IDAHO

MARCH 2015

LandWorks

Project Purpose

"This project will develop wayfinding sign designs (materials, graphics, fonts, colors, etc.) and produce construction (fabrication and installation) documents for 20-30 signs.

...The Wayfinding System Plan (already developed) only addresses vehicular needs, however this sign design phase will produce sign design templates for pathways and bike routes, as well as complete design and construction drawings for at least one kiosk.

...The City is working with a group of stakeholders to develop wayfinding sign designs that can be used as a unifying template for communities in the region."

Elements of the Wayfinding System and Program

1. Graphic Imagery and Typefaces
2. Sign Structures and Panels
3. Identification/Parking Signs
4. Pedestrian Signs
5. Sign Messaging/Sign Schedule

6. Gateway Sign
7. Informational Kiosk
8. Teton Pathways Signs
9. Driggs City Wayfinding Map
10. Overall Wayfinding “Family”

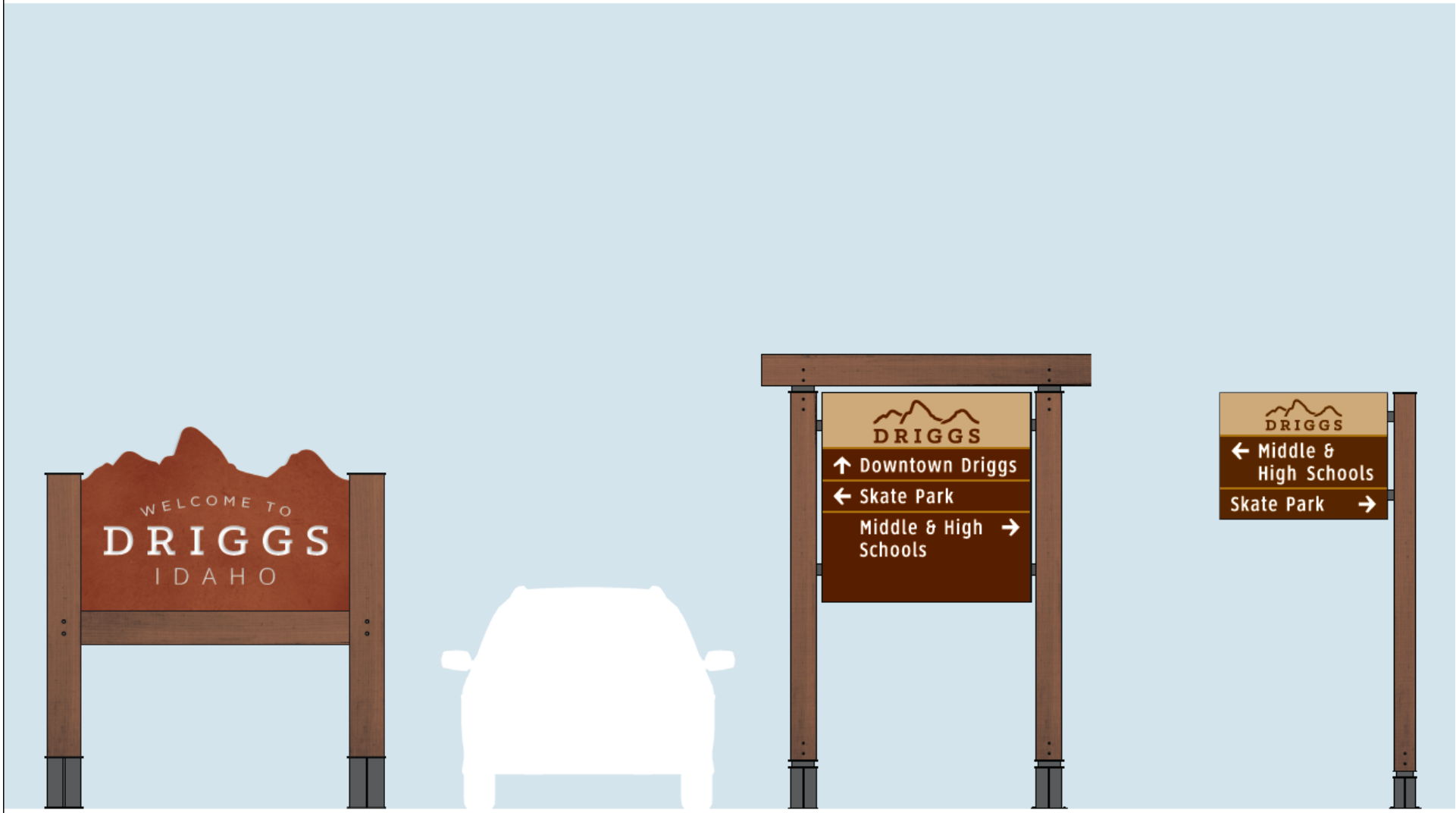

GATEWAY

VEHICULAR DIRECTIONAL
LARGE

VEHICULAR DIRECTIONAL
SMALL

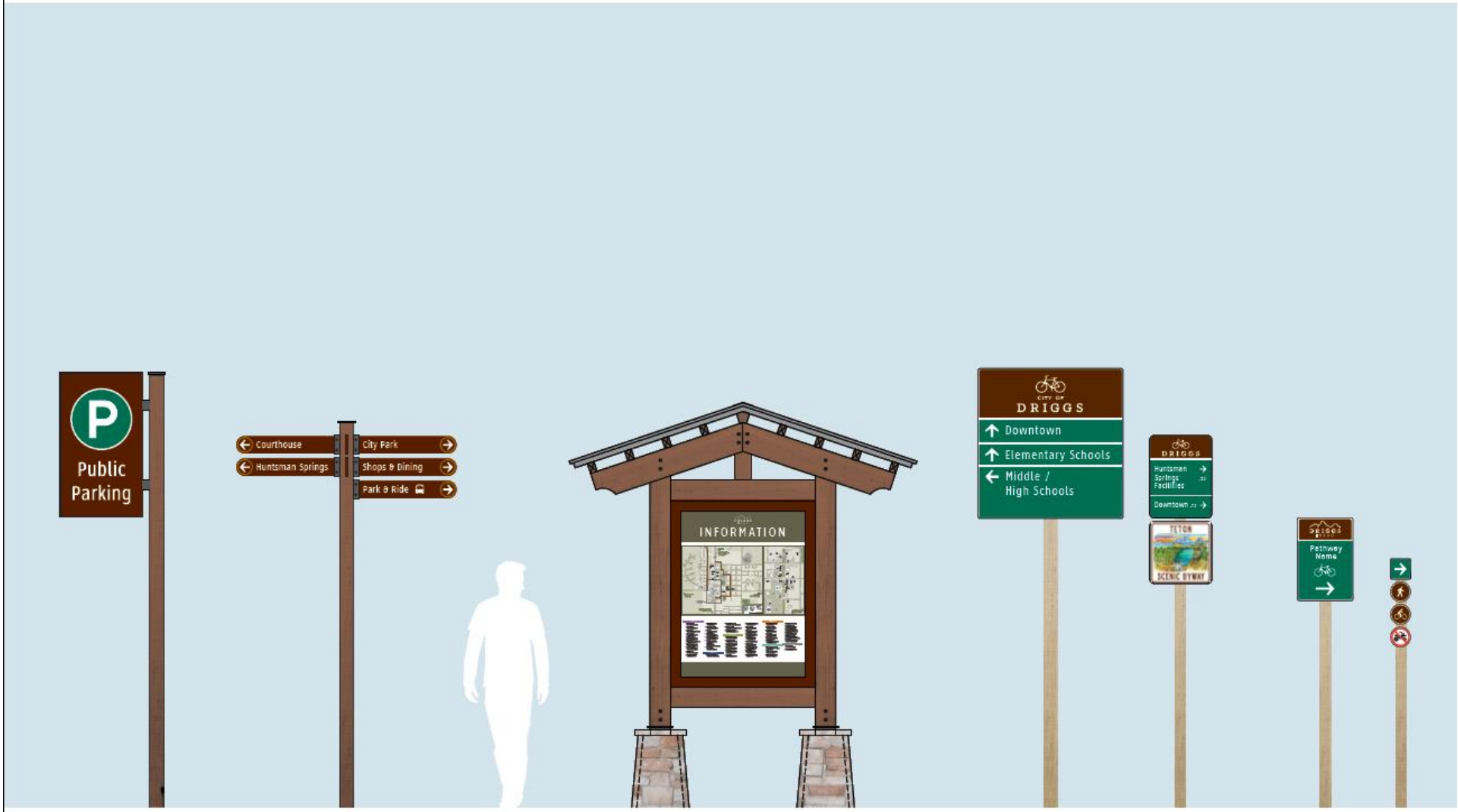

PARKING

PEDESTRIAN DIRECTIONAL

INFORMATION KIOSK

PATHWAY ON ROADWAY

PATHWAY ON PATH

1. Graphic Imagery

- Three design concepts were presented for the graphic imagery
- A “literal” image that represents the silhouette of the Tetons from Driggs was chosen
- City/County names are interchangeable for use throughout Teton County in the following slides
- Graphic imagery can be used for other city/ county applications

Driggs Graphic Imagery

DRIGGS
IDAHO

Graphic Color - Variation A

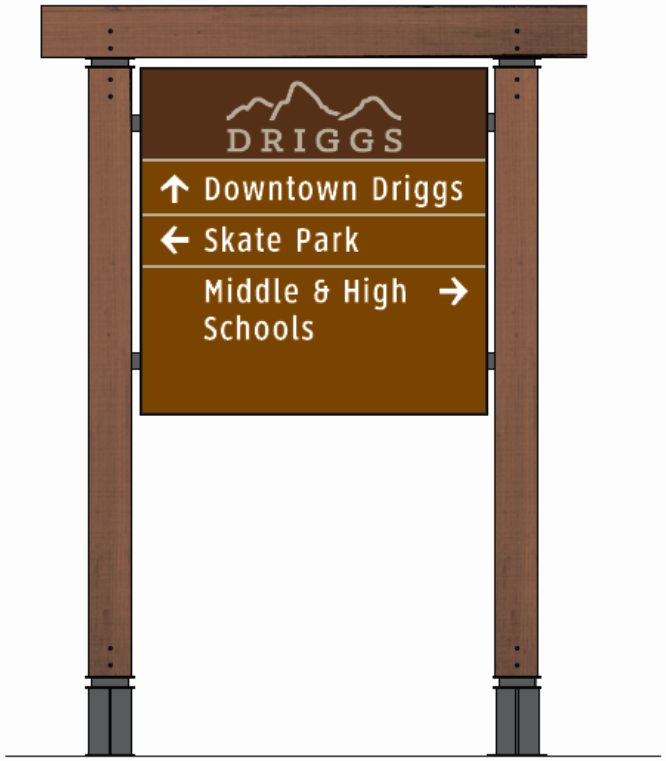

DRIGGS
IDAHO

Graphic Color - Variation B

DRIGGS
IDAHO

Graphic Color - Variation C

...and Typefaces

- Clearview for messaging has been established as the desirable typeface for highway signing
- Klinic Slab for logotype is a serif type, legible and classic yet timeless
- Universal symbols used for information purposes where necessary and applicable

CLEARVIEW

Aa Bb Cc Dd Ee Ff Gg Hh Ii Jj Kk Ll Mm
Nn Oo Pp Qq Rr Ss Tt Uu Vv Ww Xx Yy Zz
1 2 3 4 5 6 7 8 9 0

KLINIC SLAB

Aa Bb Cc Dd Ee Ff Gg Hh Ii Jj Kk Ll Mm Nn
Oo Pp Qq Rr Ss Tt Uu Vv Ww Xx Yy Zz
1 2 3 4 5 6 7 8 9 0

- Library
- Skate Park
- Shopping
- Airport
- Bicycle Trail
- Bus / Shuttle Stop
- Skiing / Winter Activities
- Food Service
- Golfing
- Hospital
- Information
- Lodging
- Parking
- Post Office
- Restrooms
- Trailhead
- Picnic / Park Area

2. Sign Structures and Panels

- Western style post and beam design
- Sized for legibility and designed to conform to MUTCD standards for wayfinding signs
- Basic post and beam construction can be built on foundation or installed with direct burial
- Final post and beam material to be determined; Western Red Cedar is initial choice

VEHICULAR DIRECTIONAL
LARGE

VEHICULAR DIRECTIONAL
SMALL

VEHICULAR DIRECTIONAL
WITH SYMBOLS

3. Identification/Parking Signs

- Signs to connect to overall design motif
- Reinforce sense of arrival by identifying destination
- Variations in size and installation possible

PARKING

PARKING
VARIATION A

PARKING
VARIATION B

4. Pedestrian Signs

- Future component of wayfinding family
- Designed for city core to reinforce the concept of a walkable downtown
- Complements “park and walk” philosophy when integrated with municipal parking

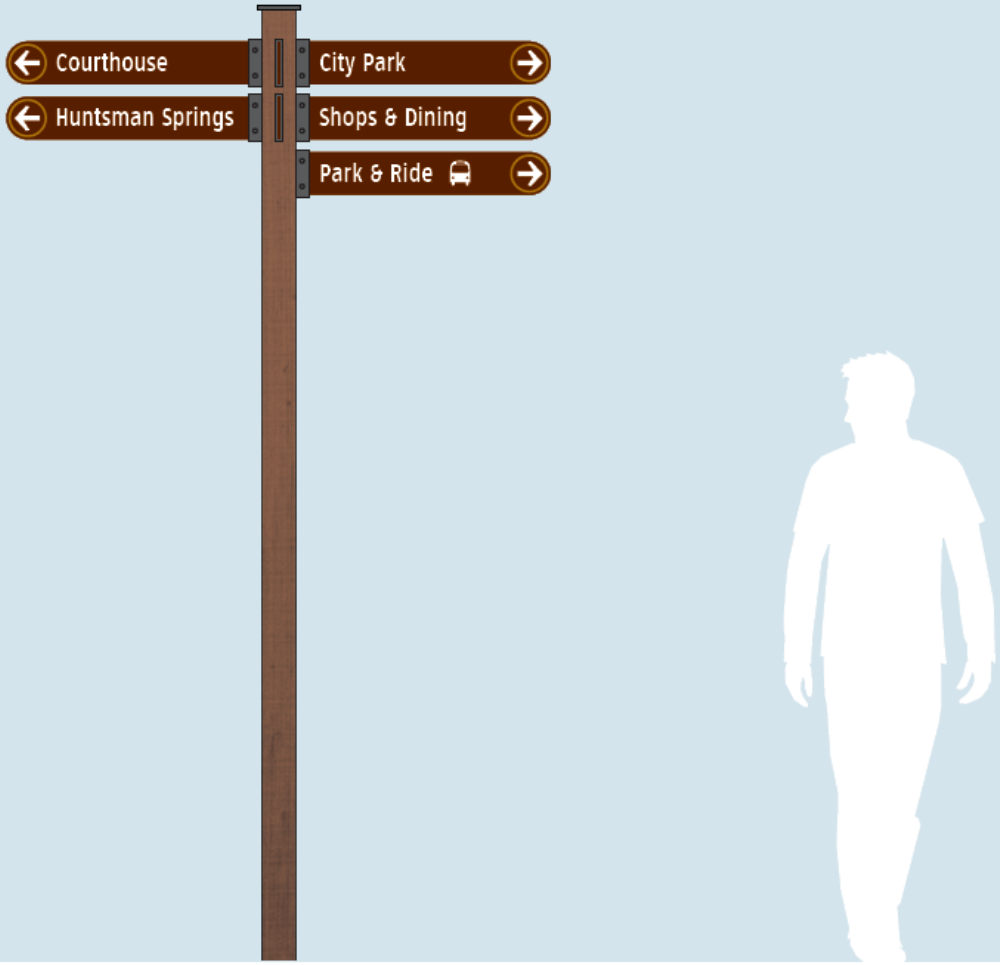

PEDESTRIAN
DIRECTIONAL

5. Sign Messaging/Sign Schedule

- Provides the guidance for what signs go where for vehicular wayfinding
- Desire to keep messaging to 3 lines
- Final specific sign locations to be determined on a site by site basis

Example of Sign Message Schedule

Driggs Wayfinding Sign System Plan [Proposed Sign Locations and Message Schedule]

South to North - (Northbound)

Count	Direction	Type	←	Message	→	Location Description	Milepost	Segment Code	Route No.	Jurisdiction
1	NB	Wayfinding	←	Pathway Parking		Northbound SH 33, .10 mile south of Creekside Meadows Ave	142.4	2460	SMA-6830	County
2	NB	Wayfinding	↑	Downtown Driggs		Northbound SH 33, .10 mile north of Creekside Meadows Ave	142.2	2460	SMA-6830	City
			↑	Grand Targhee Resort						
			↑	Huntsman Springs Resort						
			↑	Lodging Symbol						
3	NB	Wayfinding		USFS Office (i)	→	Northbound SH 33, .02 mile south of Johnson Ave	141.8	2460	SMA-6830	City
			↑	Teton Geotoursim Center ½ Mile						
4	NB	Wayfinding	←	Teton Geotourism Center (i)		Northbound Main St/SH 33, .05 mile north of Short St	141.4	2460	SMA-6830	City
			←	Park & Ride						
			←	Community Center						
			←	City Hall						
5	NB	Wayfinding	←	Teton River		Northbound Main St/SH 33, near the intersection at Little Ave	141.3	2460	SMA-6830	City
			←	Horseshoe Canyon						
				Teton Canyon	→					
				Grand Targhee Resort	→					
			↔	Golf Symbol						
				Lodging Symbol	→					
6	NB	Wayfinding	←	County Courthouse		Northbound Main St, south of Wallace Ave	141.2	2460	SMA-6830	City
				City Park	→					
7	NB	Wayfinding	↑	Huntsman Springs Resort		Northbound Main St, between Harper Ave and Howard Ave	141	2460	SMA-6830	City
			↑	Airport						
			↑	Fairgrounds						
8	NB	Wayfinding		Middle and High Schools	→	Northbound Main St, south of 750/Legrand Pierre Ave	140.6	2460	SMA-6830	City
9	NB	Wayfinding	←	Huntsman Springs Resort		Northbound Main St, south of Hunstman Springs Dr	140.3	2460	SMA-6830	City
10	NB	Wayfinding		Airport	→	Northbound SH 33, south Rodeo Dr/Warbird Ln	140.1	2460	SMA-6830	City
			↑	Fairgrounds						
			↑	Teton Valley Museum						
11	NB	Wayfinding		Fairgrounds	→	Northbound SH 33, .05 mile south of Access Rd	140	2460	SMA-6830	County
				Teton Valley Museum	→					

6. Gateway Sign

- Relates to existing gateway signs but smaller - fits better for the proposed location
- Internally list with low voltage LED lighting
- Option for stone or wood support structure

GATEWAY

GATEWAY
VARIATION A

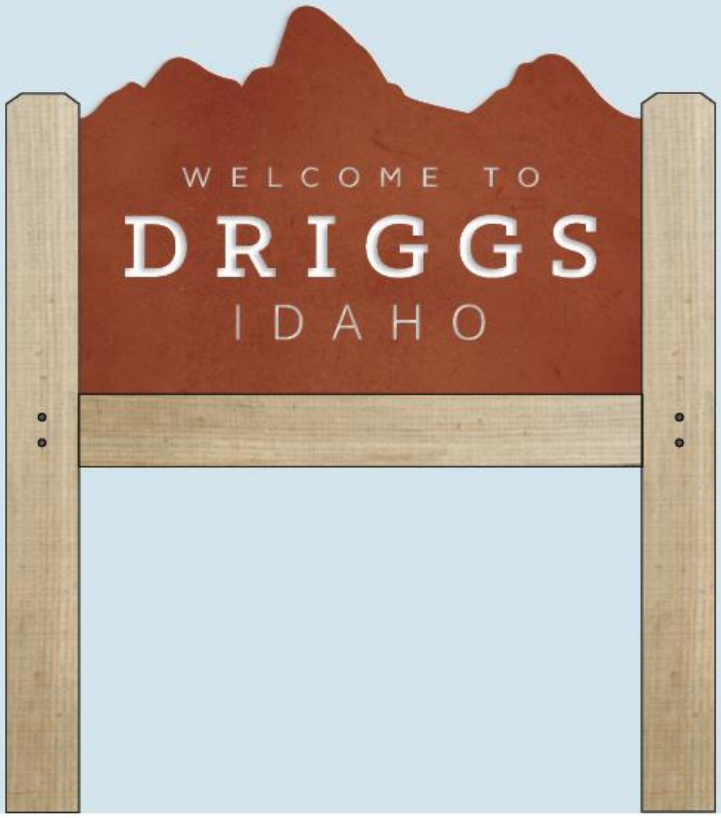

GATEWAY
VARIATION B

7. Informational Kiosk

- Derived from architecture and design of the Geotourism Center
- Designed to be lit with low voltage LEDs that can be sun-powered
- 2 sides - one with maps and changeable directories; the other for community use or interpretive information
- 2 options for post bases - stone or metal brackets

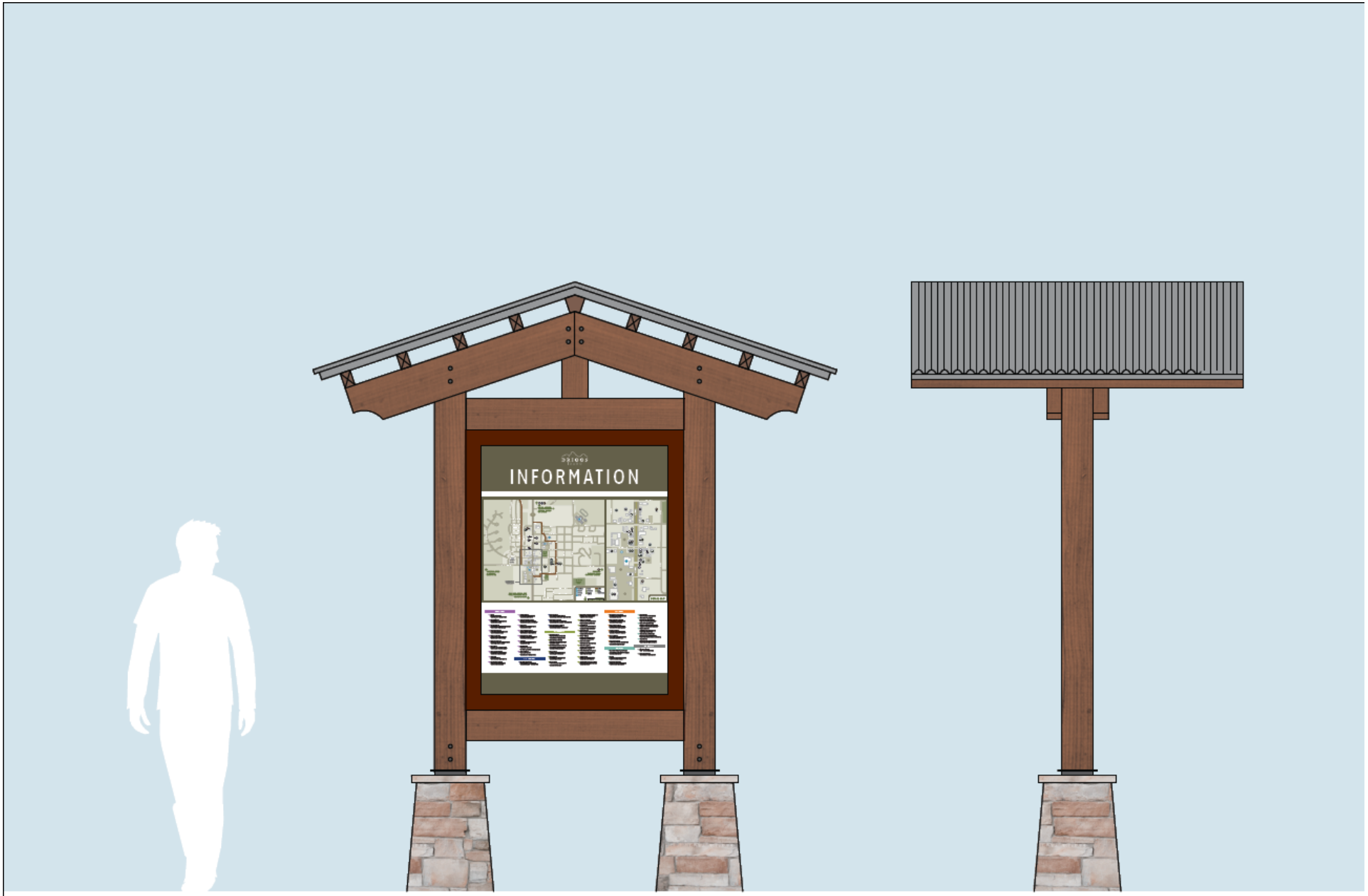

INFORMATIONAL KIOSK
FRONT VIEW

SIDE VIEW

ALTERNATIVE BASE
INFORMATIONAL KIOSK
FRONT VIEW

SIDE VIEW

8. Teton Pathways Signs

- Developed to conform with MUTCD standards for bike routes/paths
- Options for adding route name on signs
- Includes mileage information and employs symbols
- Applicable county-wide

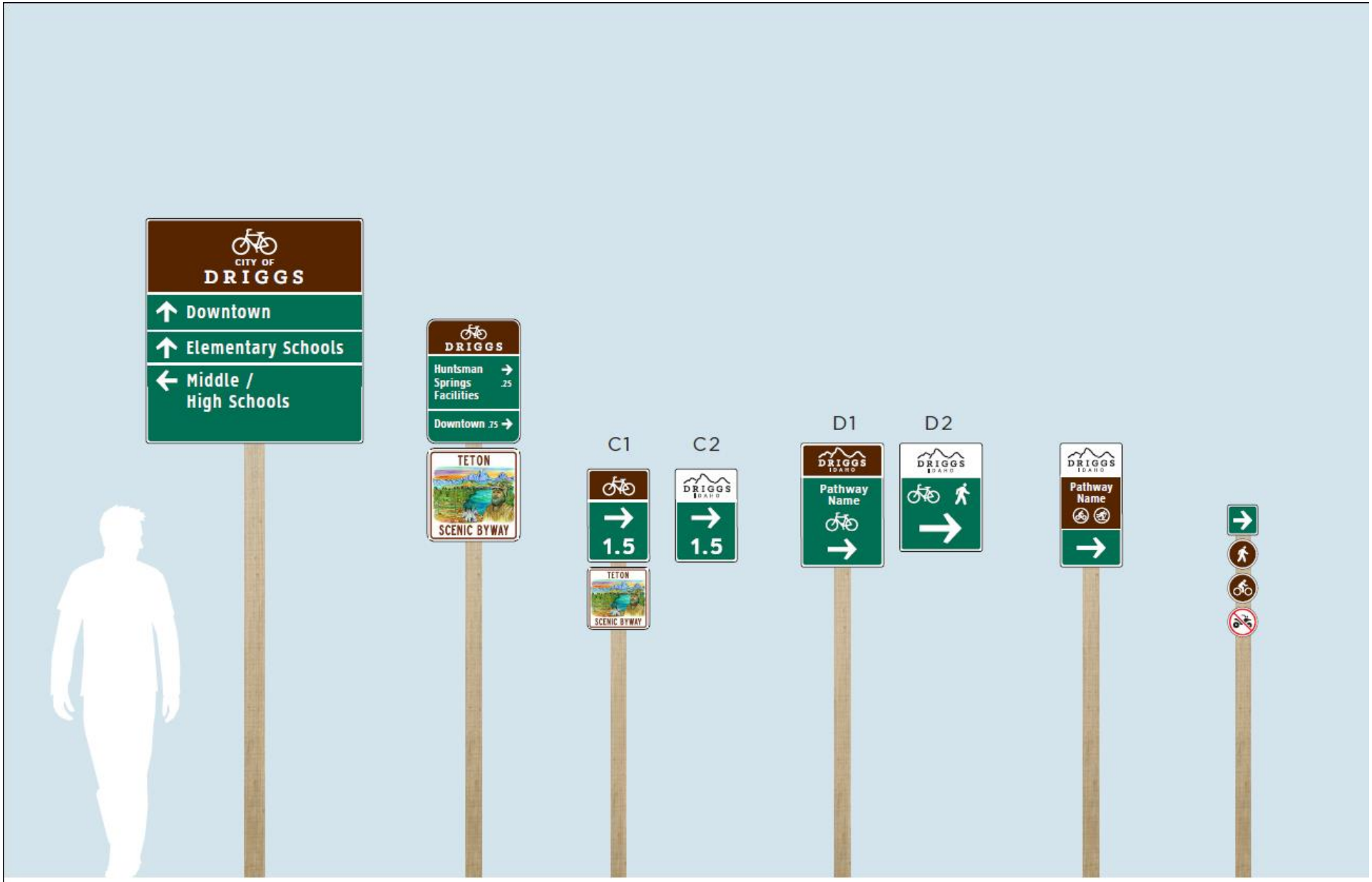

PATHWAY
VARIATION A

VAR. B

VAR. C

VAR. D

VAR. E

VAR. F

9. Driggs City Wayfinding Map

- Intended for use in the kiosk and on web site(s)
- Map can replace existing map in “Dig Driggs” guide and provided in electronic format for easy updating
- Uses symbols and graphic footprints for buildings; key buildings can be developed in “pop-up” 3D format to facilitate orientation
- Easier to reproduce, read and follow

Existing Wayfinding Map

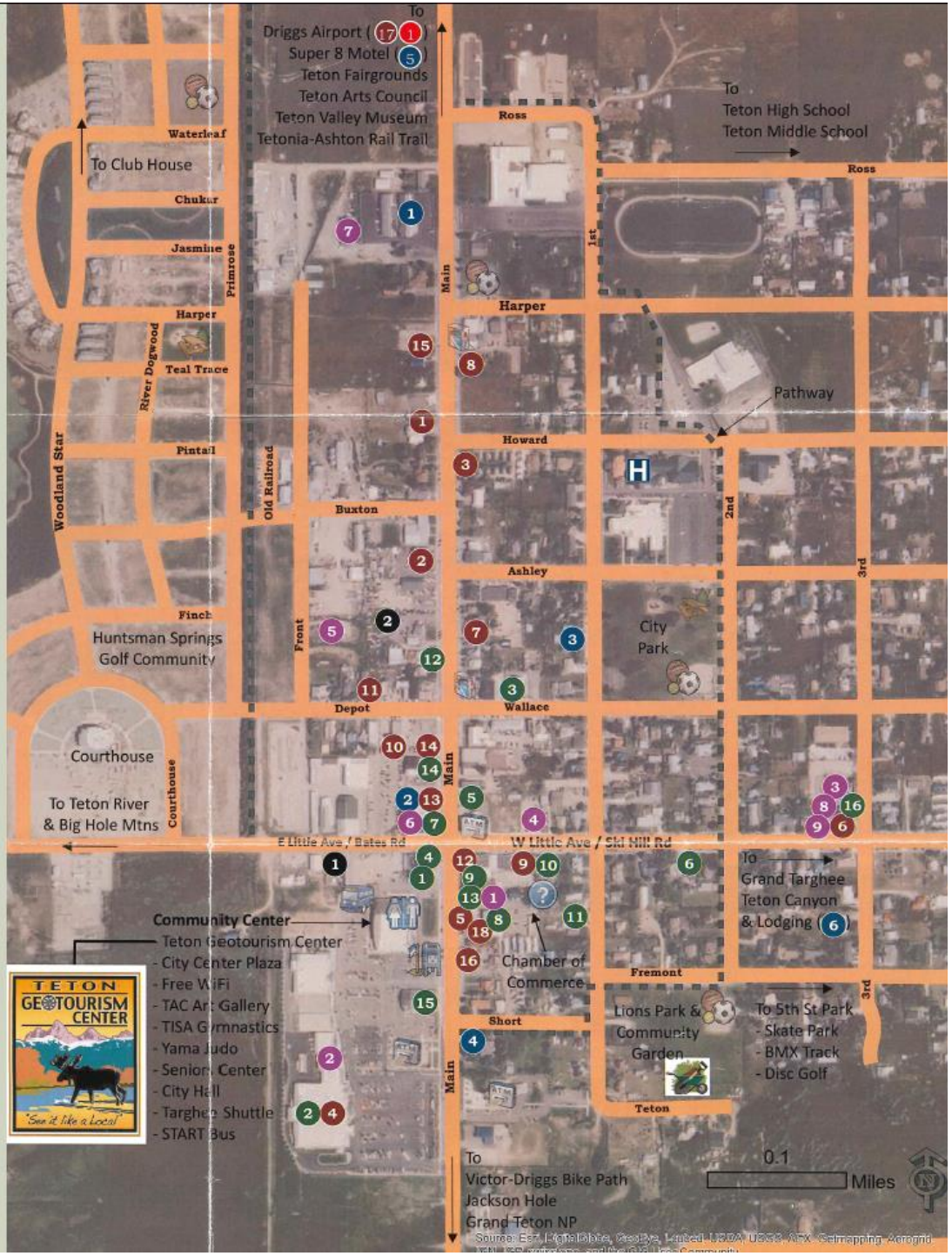

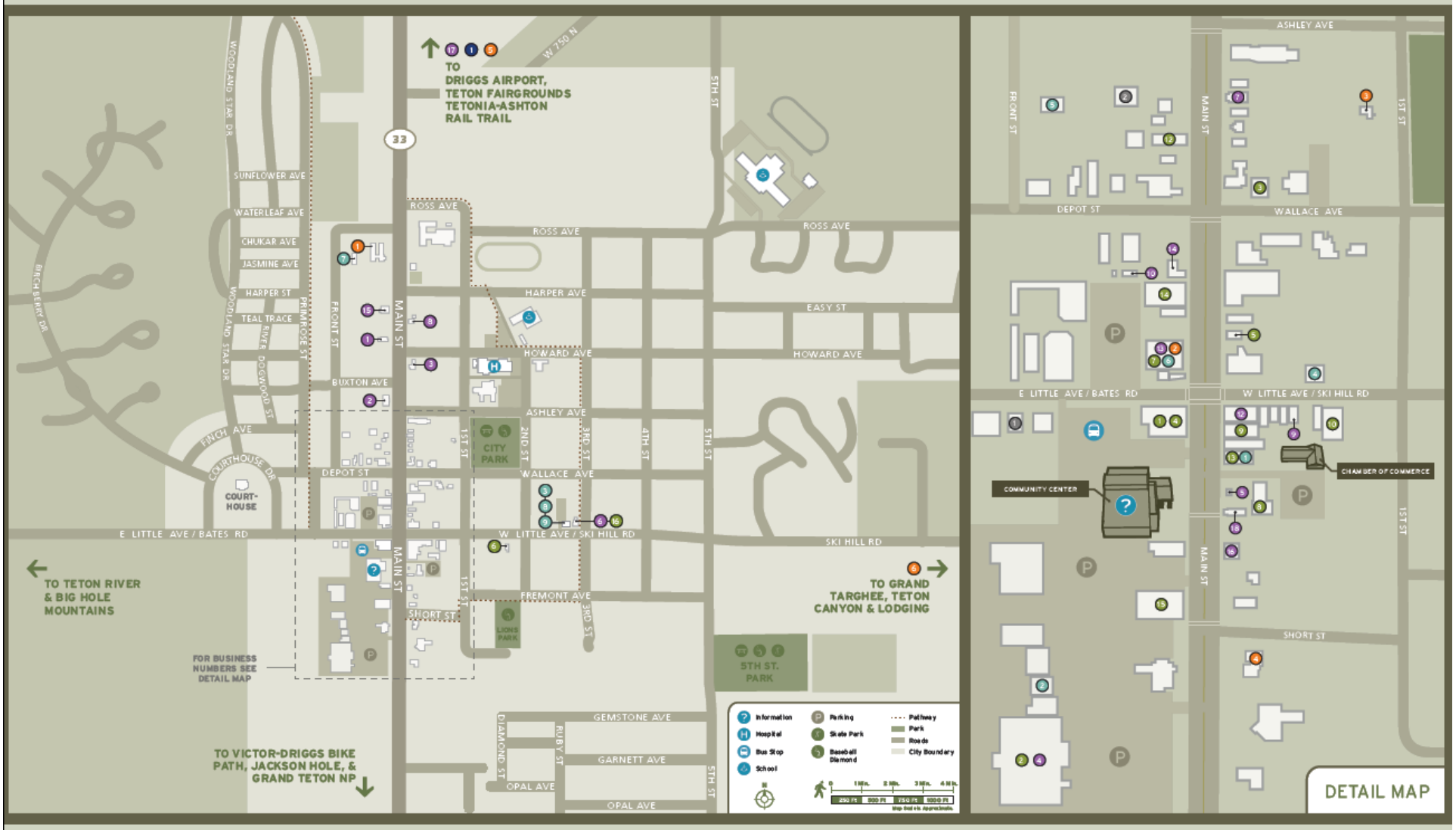

Proposed Wayfinding Map

Construction Details

- Preliminary details need to be vetted with fabricators/suppliers
- Based on projects already constructed
- Wind loading and technical details will be reviewed

LG VEHICULAR DIRECTIONAL | SIGN AND FOOTING DETAIL

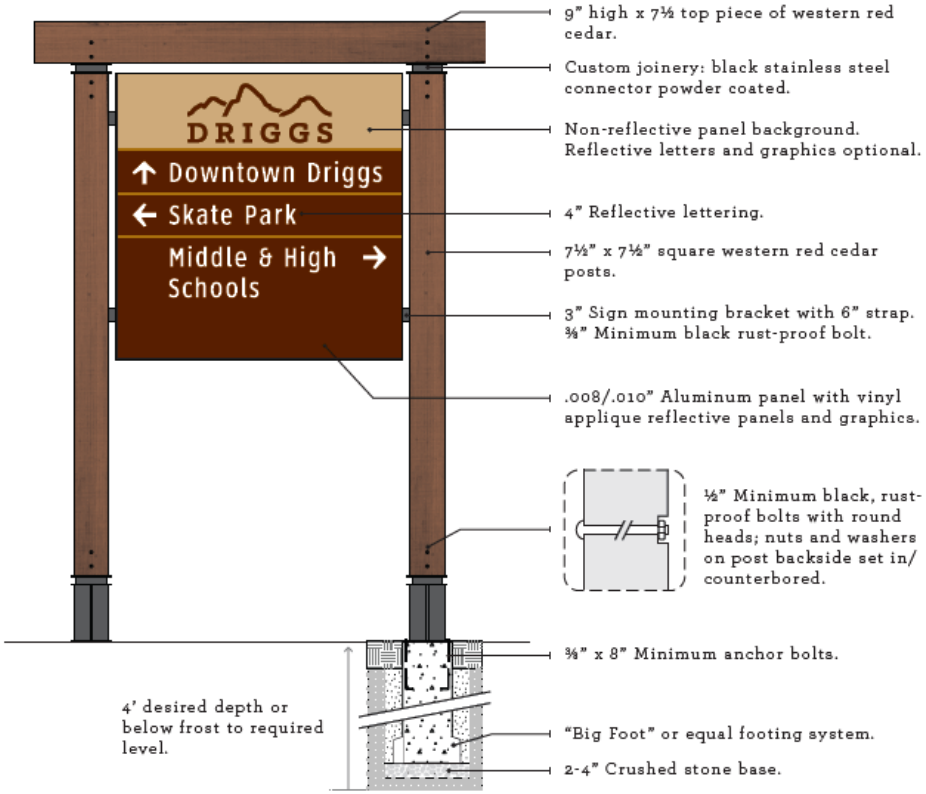

VD SIGN - FRONT COLOR

SCALE: ½" = 1'

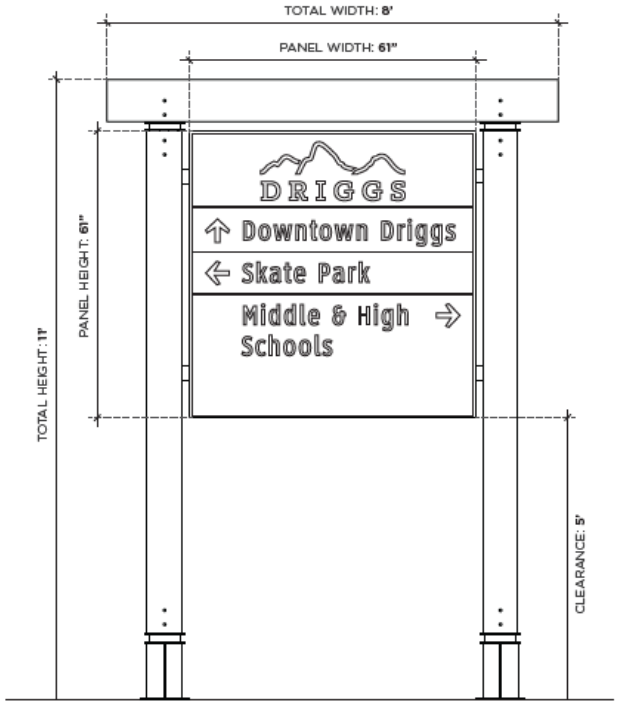

VD SIGN - FRONT DETAIL

SCALE: ½" = 1'

NOTES:

1. Aluminum sign panel adhered to minimum ¾" MDO sign board/sign board back. To be painted to match front panel color with acrylic matte or semi-gloss finish.
2. Sign post length may vary depending on grade of installation site.
3. Final post dimensions and wood subject to cost and availability.

LG VEHICULAR DIRECTIONAL | SIGN AND FOOTING DETAIL

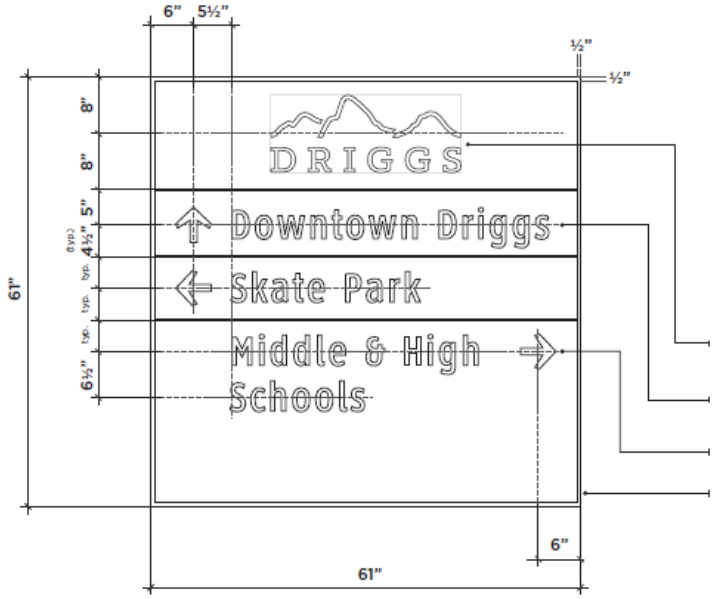

Sign Specifications:
Single-sided 6'-1" x 6'-1" x .125" aluminum sign panel with cut vinyl backing and graphics.
All graphics to be highly durable and UV resistant; 3M films or equal. Destination message and arrows to be 3M Diamond Grade DG3 white 4090 (or equal).

Color Standards:
White: Messages, arrows.
Black: Border.
Pantone 4625: Messaging background, logo.
Pantone 464: Logo background.
Pantone 1395: Message divider lines.

Logo to be 2'-3" x 11"; graphics to be provided by LandWorks.

Destination message (typ.): 4" lettering; Clearview type style.

Directional arrows (typ.) 5 x 5".

1/2" border to be black.

VD PANEL - FRONT DETAIL
SCALE: ¾" = 1'

Center line of letters to be determined by using the center point of capitalized letters.

VD PANEL - FRONT COLOR
SCALE: ¾" = 1'

228 Maple Street, Suite 32 | Middlebury, VT 05753 LandWorks

KIOSK | STRUCTURE DETAIL

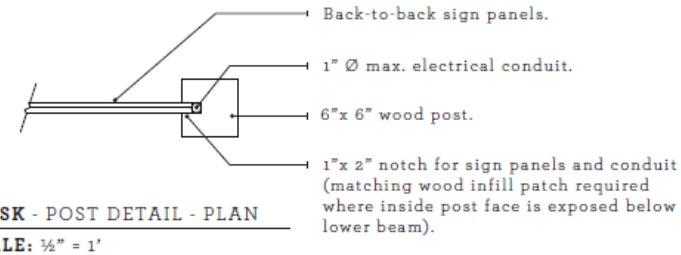

KIOSK - POST DETAIL - PLAN

SCALE: ½" = 1'

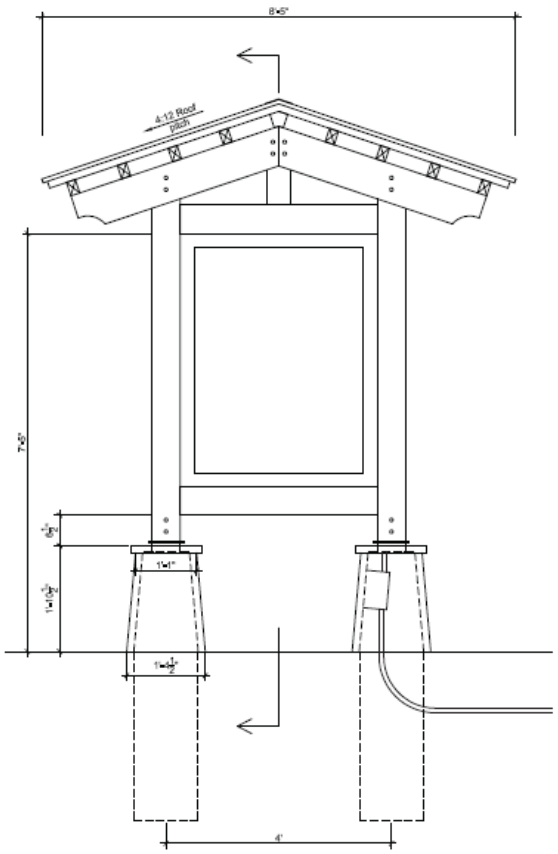

KIOSK - FRONT DETAIL

SCALE: ½" = 1'

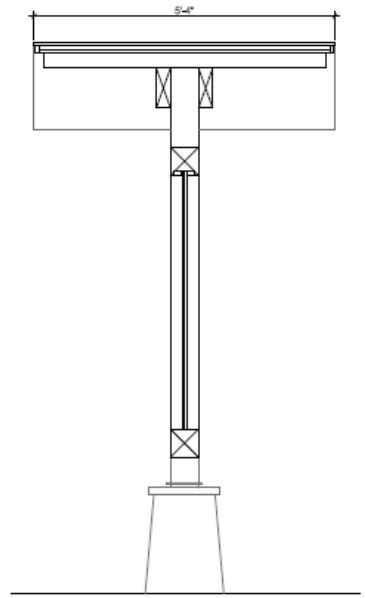

KIOSK - SECTION DETAIL

SCALE: ½" = 1'

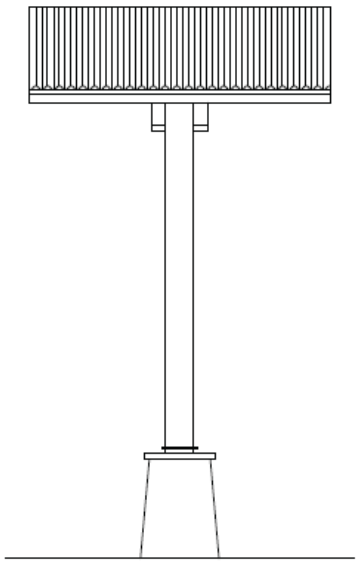

KIOSK - SIDE DETAIL

SCALE: ½" = 1'

228 Maple Street, Suite 32 | Middlebury, VT 05753 LandWorks

GRAPHIC SPECIFICATIONS | PANEL DETAIL

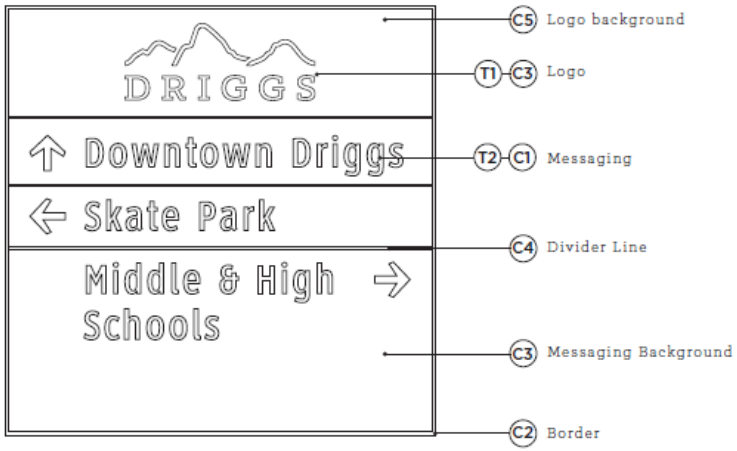

VD PANEL - FRONT COLOR

SCALE: ¾" = 1'

TYPEFACES

"DRIGGS" Lettering: Klinic Slab (T1)

Aa Bb Cc Dd Ee Ff Gg Hh Ii Jj Kk Ll Mm Nn
Oo Pp Qq Rr Ss Tt Uu Vv Ww Xx Yy Zz
1 2 3 4 5 6 7 8 9 0

Destination Messaging: Clearview Highway (T2)

Aa Bb Cc Dd Ee Ff Gg Hh Ii Jj Kk Ll Mm
Nn Oo Pp Qq Rr Ss Tt Uu Vv Ww Xx Yy Zz
1 2 3 4 5 6 7 8 9 0

LOGO ELEMENT - ONE COLOR

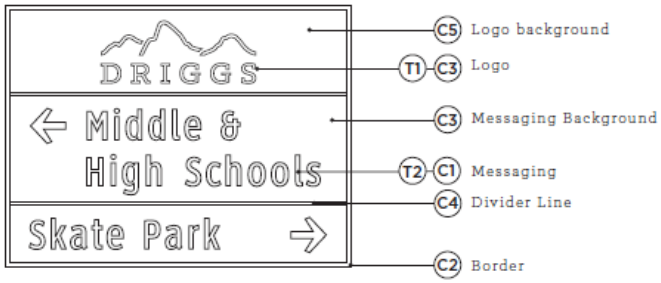

VD SMALL PANEL - FRONT COLOR

SCALE: ¾" = 1'

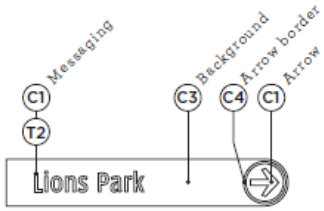

PD BLADE - FRONT COLOR

SCALE: 1" = 1'

PANEL COLORS

C1	White	C3	Pantone 4625
C2	Black	C4	Pantone 1395
		C5	Pantone 465

228 Maple Street, Suite 32 | Middlebury, VT 05753 LandWorks

Next Steps

- Refinements, as appropriate, to designs and details
- Construct, set up and evaluate full scale mock-up of vehicular directional sign
- Cost estimates and implementation/ construction recommendations
- Final Wayfinding Plan and Report submitted to the City

Thank You

LandWorks

And the City of Driggs

With funding from Western Greater Yellowstone Consortium and
Driggs Urban Renewal Agency.